CORRO-PROTEC

ANTI-CORROSION PROTECTION

for residential and commercial hot water tanks

INSTALLATION TROUBLESHOOTING & WARRANTY



TABLE OF CONTENT

FOR YOUR RECORDS **2**

INTRODUCTION **3**

SAFETY INFORMATION **3-4**

TOOLS REQUIRED **5**

INSTALLATION STEPS **6-9**

MAINTENANCE **10**

FREQUENTLY ASKED QUESTIONS **10-11**

LIMITED WARRANTY **11-12**

FOR YOUR RECORDS

Anode Rod Serial Number : _____

Serial number can be found on the top of the anode rod stainless steel part.

Water Heater Serial Number : _____

READ THIS MANUAL

Inside you'll find many helpful hints on how to install and maintain your Corro-Protec anode rod.

You'll find several answers to common questions in the FAQ section at the end of this document.

If you have general questions about the Corro-Protec anode, you can visit our website **www.corroprotec.com/faq** or contact us at **info@corroprotec.com**

READ THE SAFETY INFORMATION

Your safety and the safety of others are very important. There are many important safety messages in this manual and on your appliance. Always read and obey all safety messages.



This is the safety alert symbol. Recognize this symbol as an indication of Important Safety Information! This symbol alerts you to potential hazards that can kill or hurt you and others.

All safety messages will follow the safety alert symbol and either the word "**DANGER**", "**WARNING**", "**CAUTION**" or "**NOTICE**".

These words mean:

DANGER	**An imminently hazardous situation that will result in death or serious injury.**
WARNING	**A potentially hazardous situation that could result in death or serious injury and/or damage to property.**
CAUTION	**A potentially hazardous situation that may result in minor or moderate injury.**
NOTICE	**Attention is called to observe a specified procedure or maintain a specific condition.**

IMPORTANT SAFETY INFORMATION. READ ALL INSTRUCTIONS BEFORE USING.

⚠ WARNING

For your safety, the information in this manual must be followed to minimize the risk of fire or explosion, electric shock, or to prevent property damage, personal injury, or loss of life.

Be sure to read and understand the entire Use and Care Manual before attempting to install or operate this powered anode rod. It may save you time and cost. Pay particular attention to the Safety Instructions. Failure to follow these warnings could result in serious bodily injury or death. Should you have problems understanding the instructions in this manual, or have any questions, STOP, and get help from a qualified service technician, or the local electric utility.

SAFETY PRECAUTIONS

- Read this manual entirely before installing or operating the water heater.
- Use this appliance only for its intended purpose as described in this Use and Care Manual.
- Be sure your appliance is properly installed in accordance with local codes and the provided installation instructions.
- **DO NOT** attempt to repair or replace any part of your powered anode rod unless it is specifically recommended in this manual. All other servicing should be referred to a qualified technician.

TOOLS REQUIRED

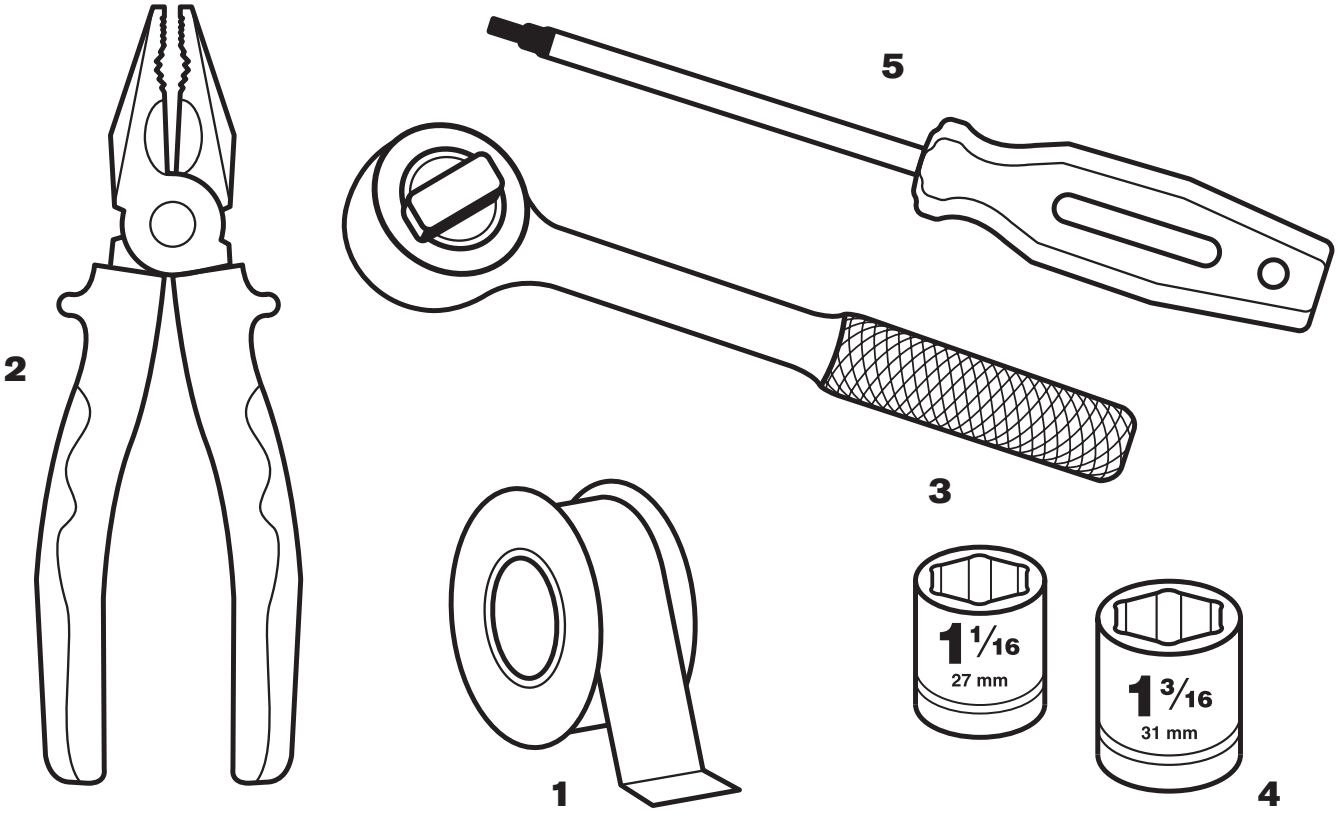

1. **Teflon tape**

2. **Universal pliers**

3. **Ratchet wrench with a 1 1/16” socket**

4. **Ratchet wrench with a 31mm socket**
   (you can also use an adjustable wrench or a 1 3/16 socket)

5. **Robertson screw driver**
   (squared-headed)

INSTALLATION STEPS

The Corro-Protec anode is universal and can be installed on all tanks and adapts to all types of water.

If you DIDN'T ORDER THE RIGHT MODEL for your tank, write to us at info@corroprotec.com with the following information and we will take care of the exchange process, FREE OF CHARGE. Your name, address, phone, Corro-Protec model ordered and Corro-Protec model you need.

NEED ASSISTANCE?

Email us : **info@corroprotec.com** Call us or text us : **1-877-466-6660**

1 **Disconnect the water heater from the power source.**
Gas: Twist the dial on the top of the thermostat from the ON to the OFF position.
Electric: Switch the circuit breaker for the water heater to the OFF position.

⚠ CAUTION **ELECTRICITY / GAS**

2 **Turn off water supply.**

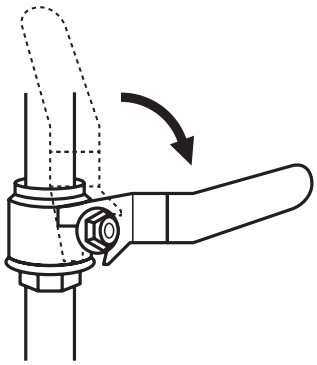

3 **Locate a 110 volts power outlet.**
The Corro-Protec rectifier cord length is 12 feet long. This should be enough to reach an outlet. If it's not the case, install a 110v outlet near the tank by a professional electrician following the electric code.

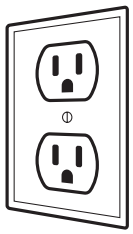

4 **Release the pressure from the tank using the pressure relief valve.** Make sure the pressure relief valve is safely connected to a drain. When the tank don't have pressure anymore, turn off the pressure relief valve.

⚠ CAUTION **HOT WATER**

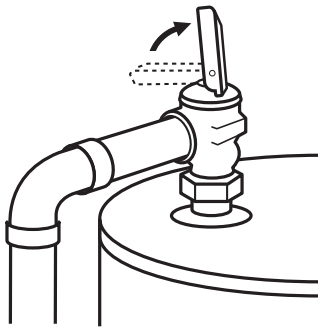

5 Locate the magnesium anode rod on top of the tank.

You can use the owner's manual of the water heater to help you locate the anode. The anode rod can be located under an insulation layer. You need to remove some insulation in order to access the rod. Here are some standard locations of the anode rod in your tank:

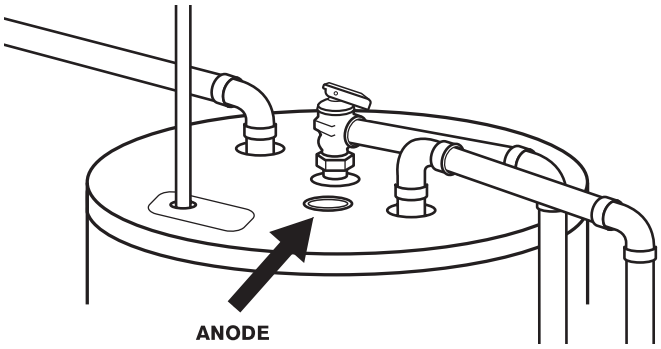

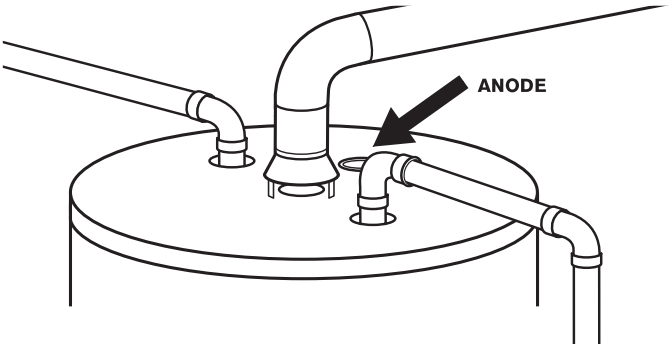

If you have a Bradford White water heater, the anode rod might be located in the hot water outlet.
Please see page 10 for more informations.

6 Using the ratchet wrench fitted with a 1 1/16" socket, unscrew the existing anode counterclockwise.

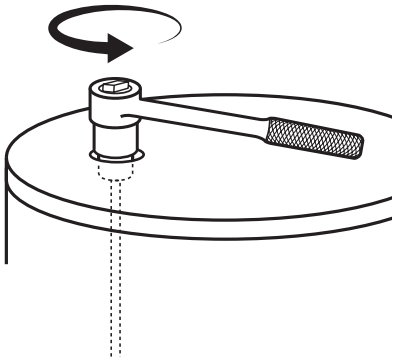

⚠ NOTICE Use a 1 1/16'' hexagonal socket to avoid damaging the rod hex head.

If you are having some difficulties removing the anode rod, here's some tips:

1. Use a breaker bar
2. Use an impact wrench
3. Use a torque multiplier

If you are not able to remove the magnesium rod after trying all steps listed above, send us an email at info@corroprotec.com and we will send you a different model that can be installed in the hot water outlet port.

7 Slowly remove the original magnesium anode.

Should you have to cut it into pieces due to limited space, be sure to hold the bottom to keep it from slipping inside the tank.

⚠ CAUTION **PLEASE DISPOSE IN A SAFE WAY** and as per your municipality environmental waste regulations.

8 Cover the threaded part of the anode with Teflon Tape.

Apply 5-6 layers of teflon tape counterclockwise .

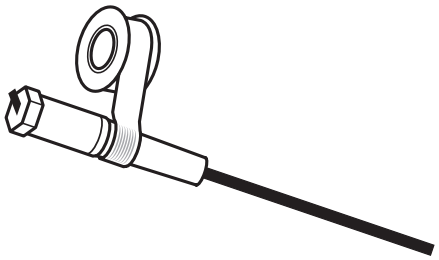

9 **Insert the Corro-Protec anode and manually screw it to make sure threads are aligned.**

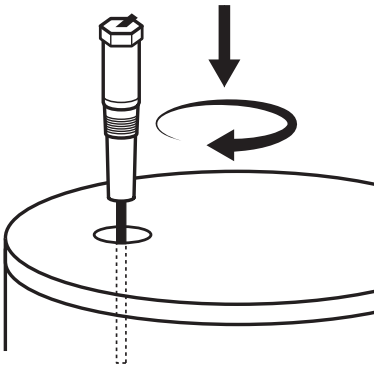

10 **Using the ratchet wrench fitted with a 31 mm socket, screw the Corro-Protec anode rod clockwise.** If you have enough clearance, you can use an adjustable pipe wrench to install the anode.

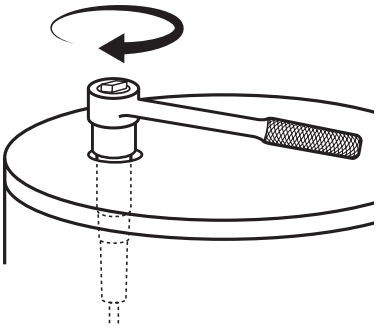

⚠ NOTICE

DO NOT USE EXCESSIVE FORCE WHEN TIGHTENING.

The Corro-Protec anode will sit higher than the magnesium anode rod previously installed. Depending on your water heater, the rod will be higher or lower than our pictures.

11 **Install the black grounding connection on one of the tank cover screws.** Make sure the ground is in direct contact with the metal and not on the paint.

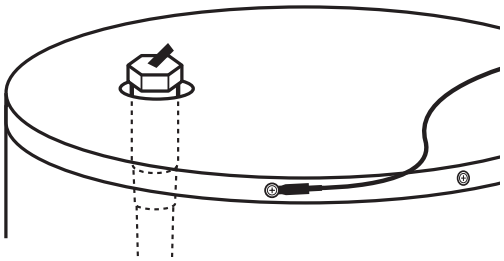

12 **Insert the female connection in the exceeding end-piece of the anode and press firmly using universal pliers.**

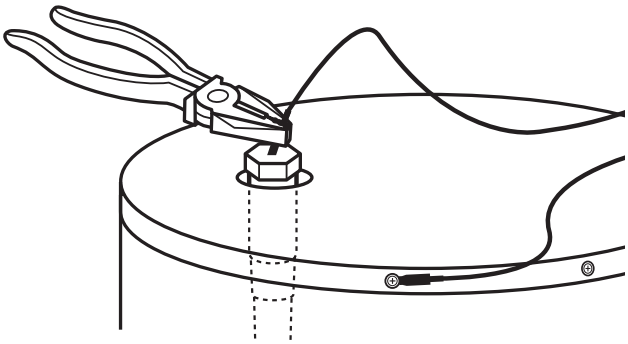

13 **Turn on water supply and make sure the tank is full.**

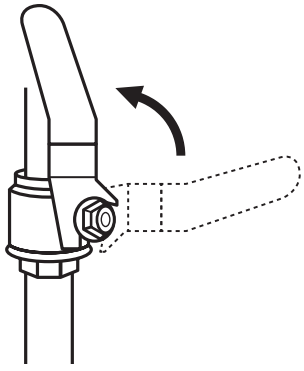

14 Connect the power source.

Gas: Twist the dial on the top of the thermostat from the OFF to the ON position.
Electric: Switch the circuit breaker for the water heater to the ON position.

15 Connect the Corro-Protec power supply to the 110v outlet.

The light located on the rectifier will automatically light after couple seconds.

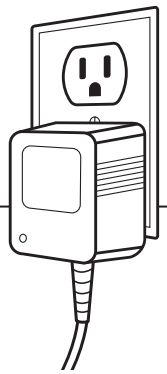

If the Green light doesn't turn ON:

To ensure that the Corro-Protec works, the following conditions must be met:

- The rectifier must be connected.
- Corro-Protec must be connected to the rectifier.
- The negative side must be installed on the water heater, as indicated at step #11.
- The water heater must be functional (full of water and operational).

If the above conditions are met and the indicator light is not lit, please visit **corroprotec.com/warranty-claim** or contact us at info@corroprotec.com / 1-877-466-6660 and we will send you a new power supply.

16 Register your Corro-Protec anode to activate the 20 years warranty at **corroprotec.com/warranty**

CORRO-PROTEC

MAINTENANCE

Corro-Protec recommends inspecting your anode yearly to make sure the green light is on.

Green light on the power supply means everything is working as it should and your tank is protected.

FAQ Frequently asked questions

How do you install the Corro-Protec on a Bradford White Water Heater?

Since Bradford White water heaters have the magnesium anode built into the hot water outlet, you need our Corro-Protec for Bradford Whites model that comes with all the fittings you need to install it.

If you ordered the regular Corro-Protec instead of the Badford White model, you don't have to create a return or pay any return fees. You just have to send us an email at info@corroprotec.com with your Name, Address and phone number so we can take care of the exchange for you.

My water heater has 2 magnesium anodes, should I replace both?

The answer is no and that is why Corro-Protec offers different models adapted to tank sizes.

If your water heater has two anodes, you can replace one of them with our Corro-Protec anode and leave the other one in place. Even if you install the Corro-Protec anode to eliminate the rotten egg smell in your hot water, you don't need to remove the second magnesium anode.

Do I have to unplug the Corro-Protec if we turn off the hot water for several months at our cottage?

The Corro-Protec does not require any special maintenance. Leave it connected at all times, and it will work only if necessary. Even if you turn off the hot water tank, if there is still water in the tank, the Corro-Protec will remain functional to prevent corrosion. If you empty the tank, the Corro-Protec will turn off automatically because the water acts as a conductor between the anode and the ground.

An impressed current anode does not function as a heating element. There is no danger in emptying the water from the tank without disconnecting the anode.

Can I use a powered anode if I have a water softener?

Yes, it is even highly recommended to install an impressed current anode if you have a water softener.

The water softener generally makes the water more aggressive to the tanks, which reduces the life of your hot water tank and creates a more conducive environment for the development of Sulfur Reducing Bacteria that creates the rotten egg smell in hot water. The Corro-Protec Powered anode rod will automatically adjust to provide optimum rust protection.

What is the annual power consumption of a Powered Anode Rod?

Since the amount of current used by the anode will vary from region to region due to the hardness of the water, it is impossible to give an exact answer. However, on average, the anode will use 10 KWh per year. If we take the average price of electricity in the United States, the cost to run the anode 24 hours a day all year round is $ 1.36.

Is it normal to read a voltage lower than that indicated on the Powered Anode rectifier?

Yes, because the voltage adjusts automatically depending on the resistance of your water. A very low voltage means that your water is very conductive and the anode does not need to send much current to provide adequate protection.

LIMITED WARRANTY

What does this limited warranty cover?

Corro-Protec warrants this powered anode system against defects in material or workmanship for twenty years when installed in a single-family residence. If this part is installed in any location other than a single-family residence, the warranty period is reduced to 2 years. This warranty sets forth owner's only remedy and our sole responsibility with respect to any defect in this part.

During the warranty period, Corro-Protec will repair or replace, at no charge, products or parts of a product that proves defective because of improper material or workmanship, under normal use and maintenance.

What will we do to correct problems?

Corro-Protec will either replace or repair the product at no charge, using new or refurbished replacement parts. If an identical part is no longer available due to a change in law, regulation, or standard, we will replace the part with one having similar functionality.

How long does the coverage last?

The limited warranty periods for physical goods purchased from Corro-Protec is 20 years from the date of purchase when installed in a single-family residence. A replacement physical good or part assumes the remaining warranty of the original physical good or 90 days from the date of the replacement or repair, whichever is longer.

What does the limited warranty not cover?

This limited warranty does not cover any problems that is caused by :

- Conditions, malfunctions, or damage not resulting from defects in material or workmanship.
- Improper installation or maintenance.
- Failure to follow applicable codes and/or printed instructions.
- Alterations to the anode or the power supply.
- Failure to operate the part at the specific voltage/wattage.
- Damage during shipping, transport, or installation.
- Abuse, misuse, accident, fire, flood, or acts of God.
- Service trips to teach you how to install, use or maintain the part.
- The water heater itself or any of its components which are not part of the Corro-Protec product.

THE IMPLIED WARRANTIES OF MERCHANTABILITY AND FITNESS FOR A PARTICULAR PURPOSE ARE LIMITED TO THE APPLICABLE DURATION OF THIS WARRANTY. ALL OTHER WARRANTIES ARE EXPRESSLY DISCLAIMED. IN NO EVENT SHALL WE BE LIABLE FOR ANY CONSEQUENTIAL, INCIDENTAL, SPECIAL, PUNITIVE OR OTHER DAMAGES, WHETHER LIABILITY IS BASED ON TORT, CONTRACT, STRICT LIABILITY OR ANY OTHER THEORY. Some states or provinces do not allow limitation and/or the above exclusion on how long implied warranties last, or do not allow for the exclusion of incidental or consequential damages, so the above limitations may not apply to you. This warranty gives you specific legal rights and you may also have other rights, which vary upon location.

CORRO-PROTEC

CORRO-PROTEC
40, Boulevard Industriel, Princeville, Quebec, G6L 4P2
1-877-466-6660 | info@corroprotec.com

CORROPROTEC.COM